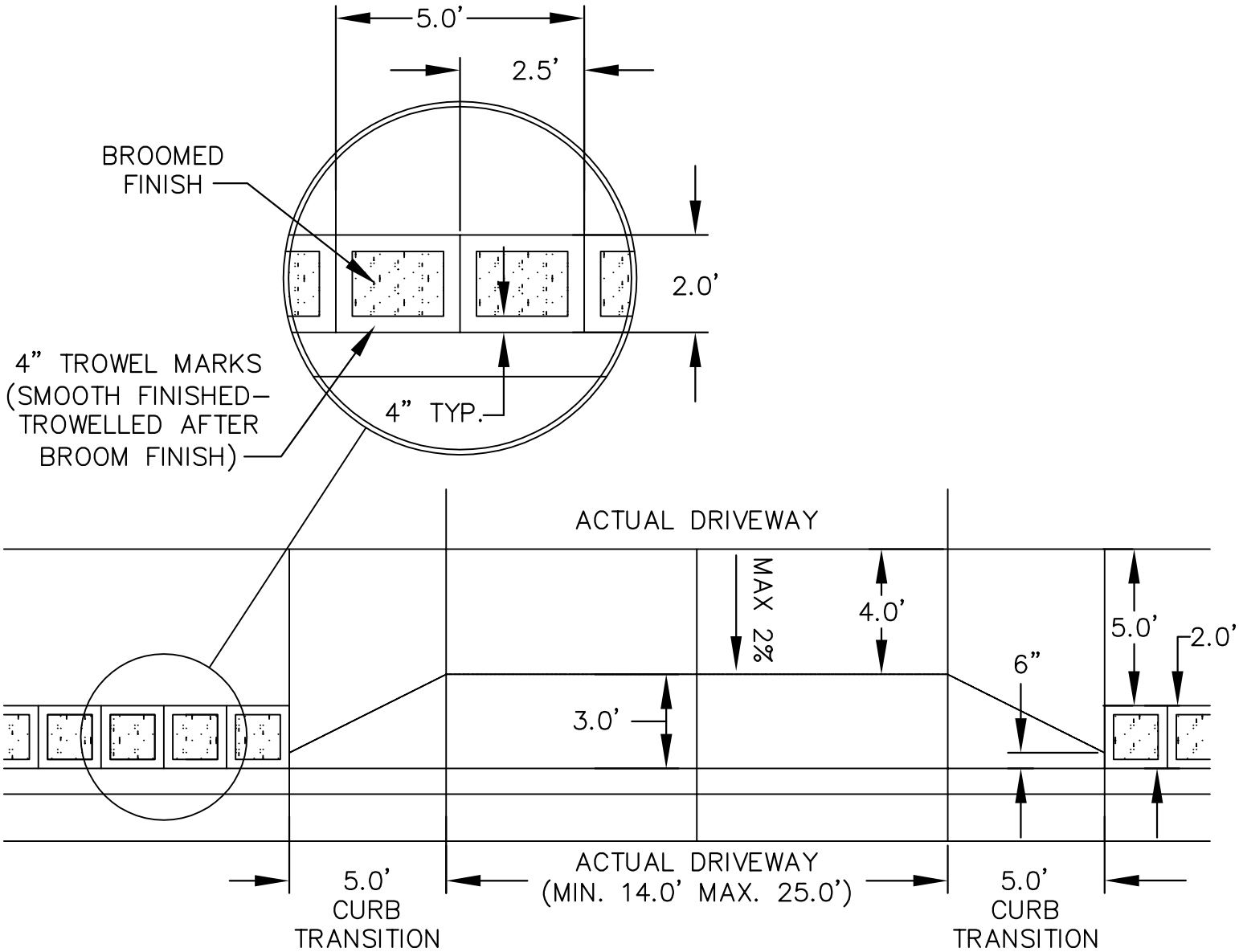

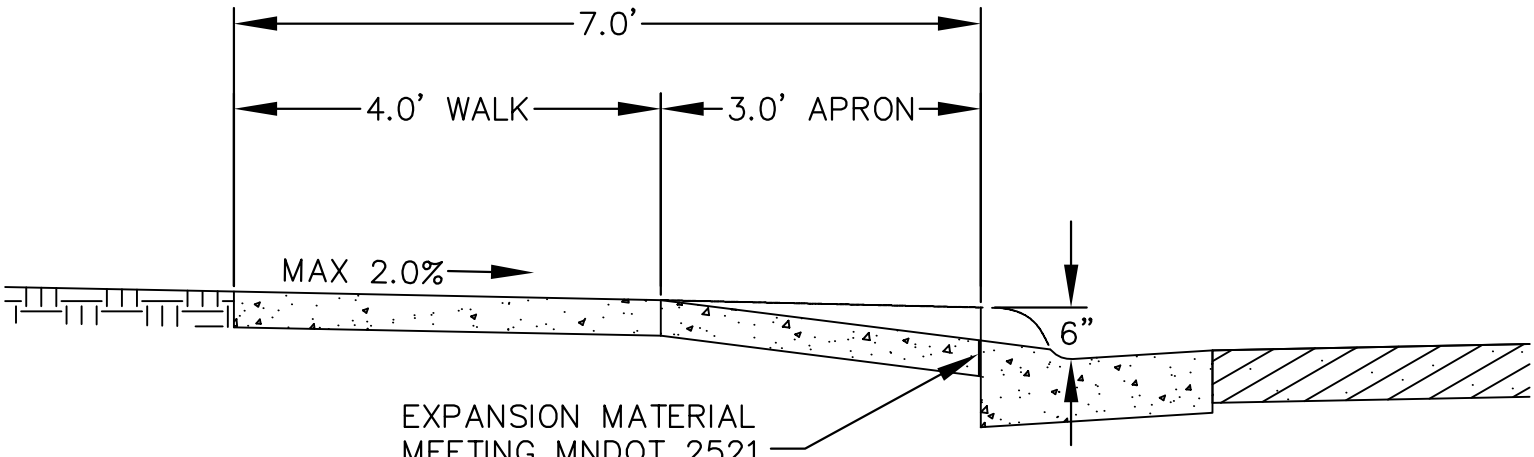

NOT TO SCALE

APPROVED JANUARY 1, 2018

CITY ENGINEER REG 23110

SIDEWALK WITH 2' CONCRETE SHOULDER (AT DRIVEWAY)

City of Golden Valley

GV-STRT-010