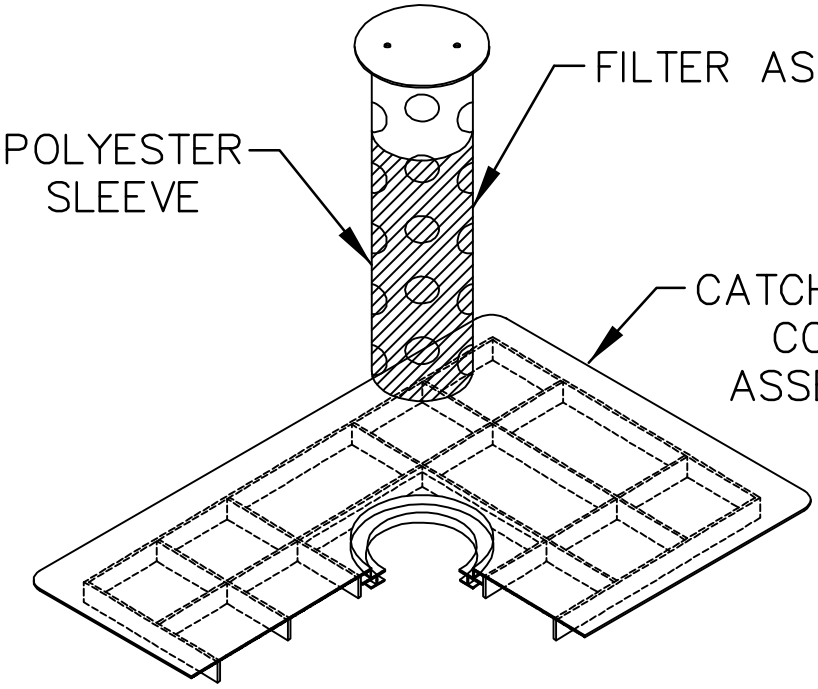

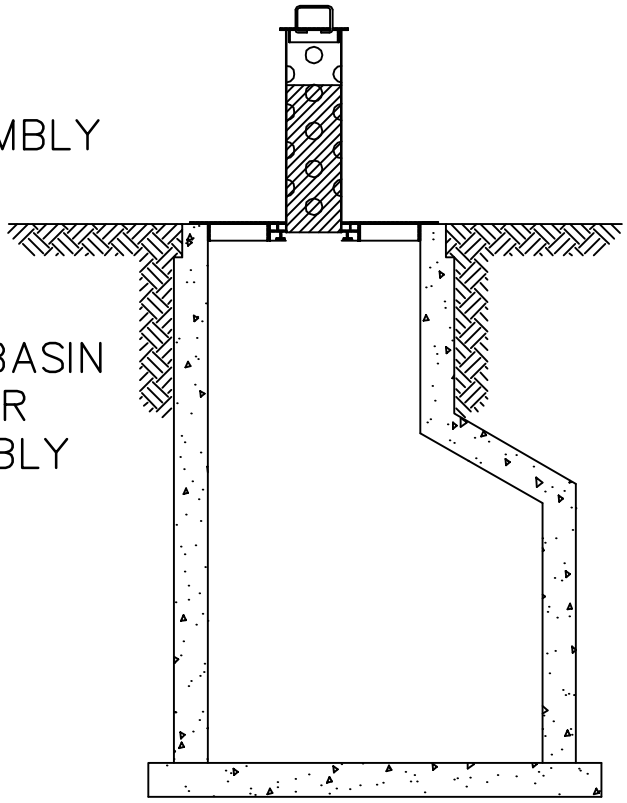

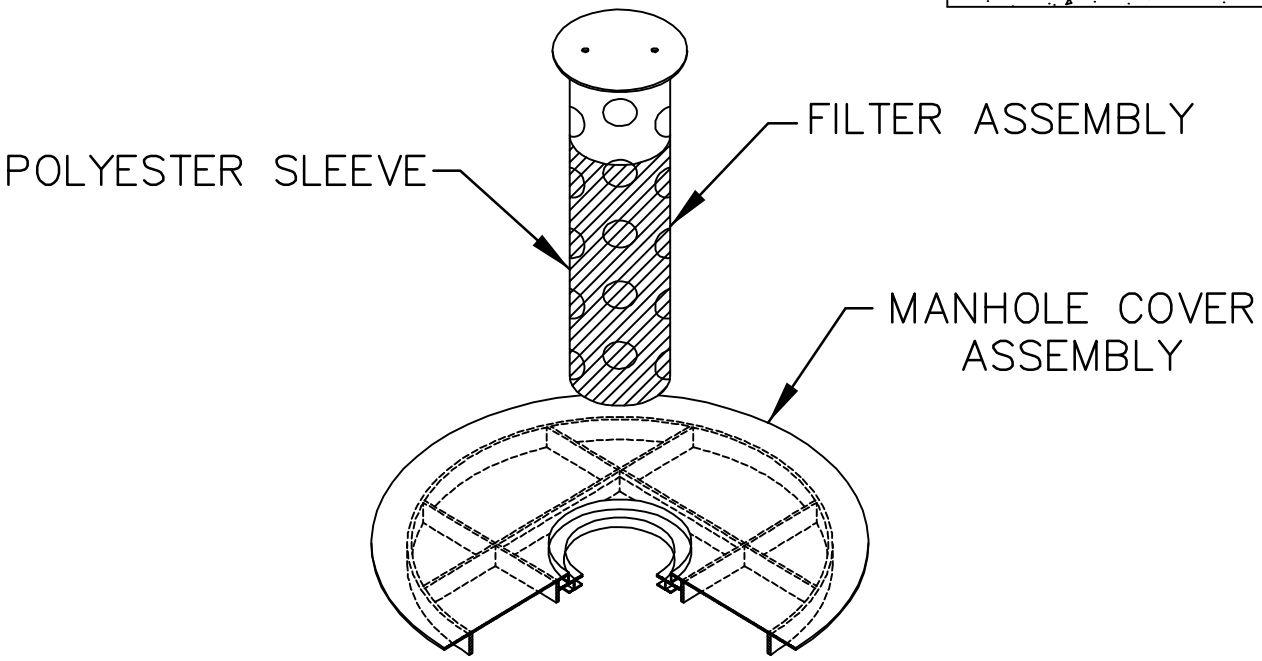

APPROVED DECEMBER 31, 2015

CITY ENGINEER REG 23110

TEMPORARY WIMCO™
INLET PROTECTION
OR APPROVED EQUAL

City of Golden Valley

GV-EC-010